REVISION RECORD				
REV	ECO	DESCRIPTION	DRFT	CHKD

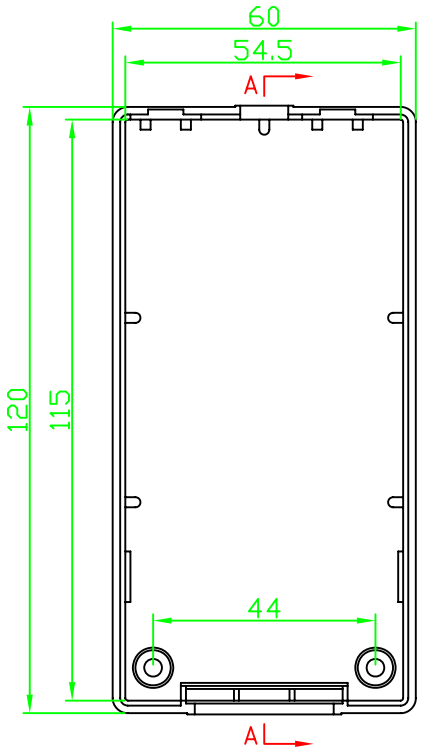

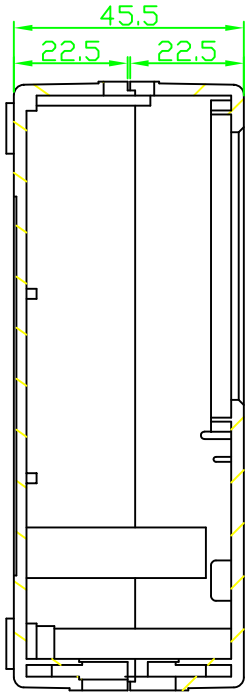

A-A

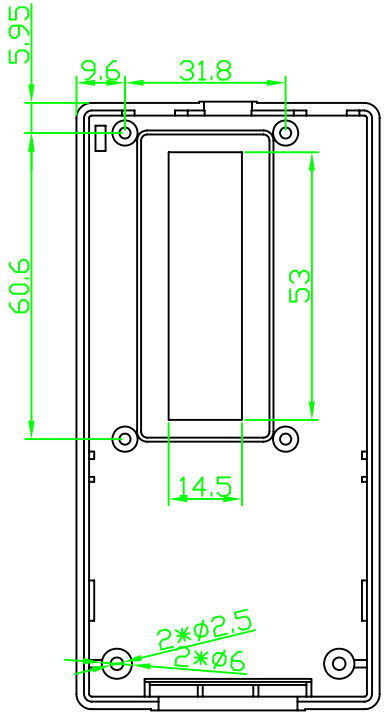

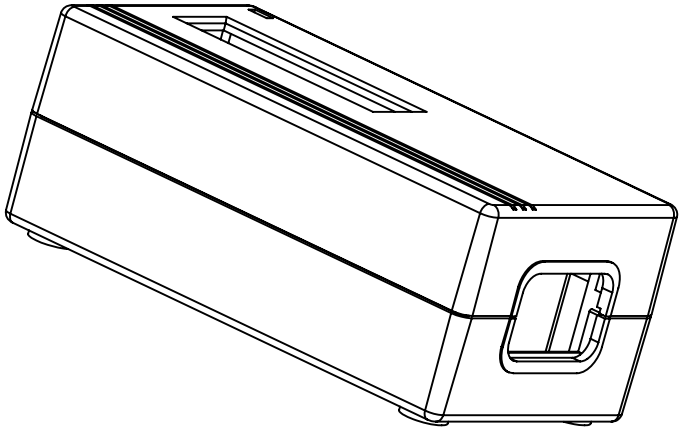

DETACHED LISTS	MM (INCH)	DFTD	DATE
	TOLERANCES EXCEPT AS NOTED	CHKD	DATE
	MM .0 ± 0.3 ±	MFD	DATE
	.00 ± 0.2 ±	APPVL	DATE
	.000 ± 0.1 ±	MATERIAL : ABS	
	ANGLES ± 5°	QT'Y :	
	FIRST ANGLE PROJECTION	FINISH:	
		SCALE : 1:1	

埃弗勒斯 EVEREST

EVEREST
WWW.EVERESTCASE.COM

TITLE
PC022

DRAWING NO. PC022
/PART NO. 00

SIZE A4 | REV

DO NOT SCALE DRAWING | SHEET 1 OF 1